THE G&P APPROACH TO ROLL GRINDING

BULLETIN BRG-3

Adapt your lathe for rolls-with a grinder from G&P –Standard models –or special models custom built for your specific needs.

Features

- **Precision Ball Bearings**
- **Tapered Spindle**
- **Tapered Bore Contact Wheel**
- **Air Tensioning**
- **Enclosed Belt Guard**

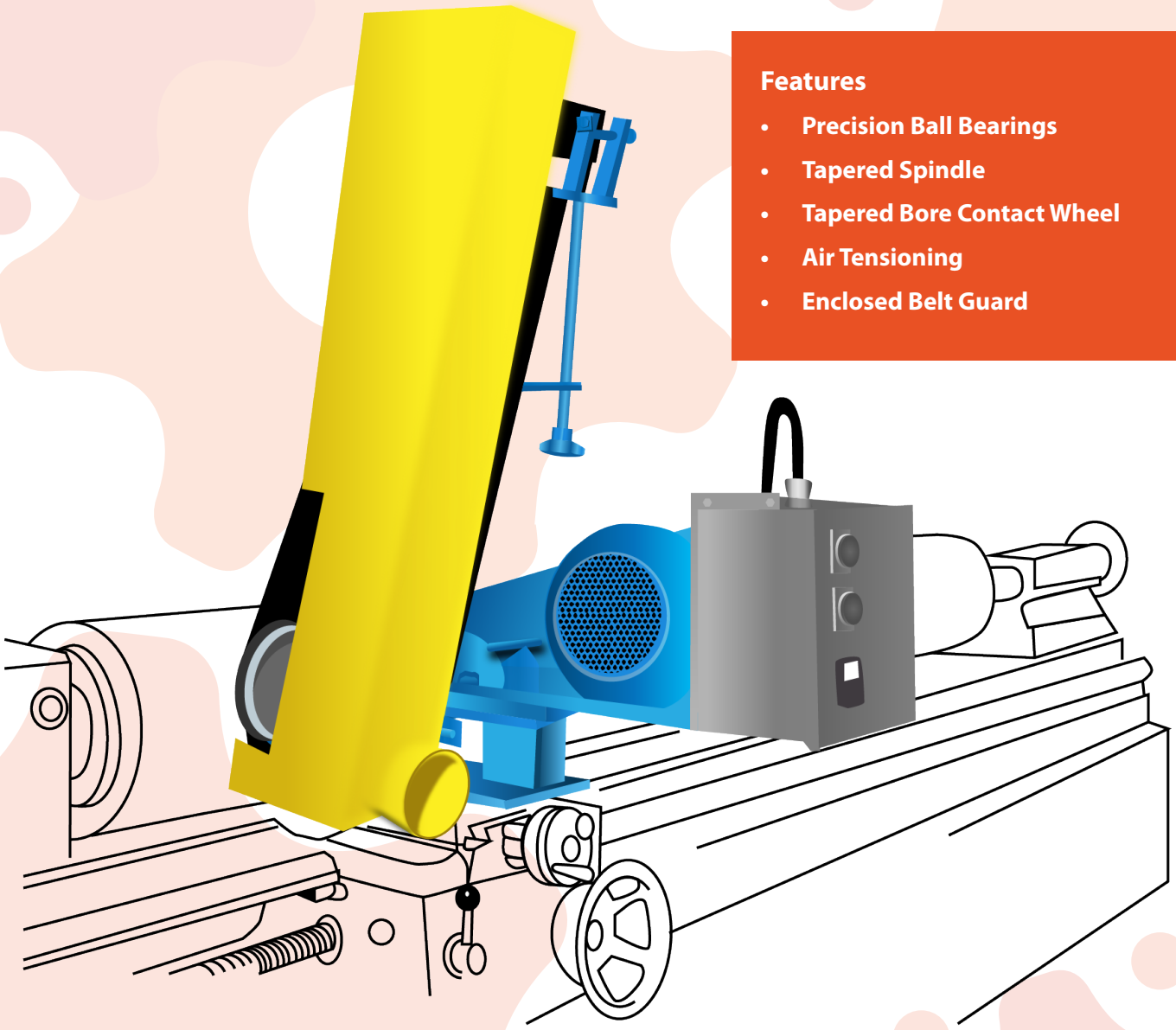

WEAR EYE, EAR & RESPIRATORY PROTECTION WHEN GRINDING

G&P MACHINERY

GRINDING & POLISHING MACHINERY CORPORATION
2801 TOBEY DRIVE / INDIANAPOLIS, IN 46219
PHONE (317) 898-0750 • FAX (317) 899-1627

CONVERT YOUR LATHE INTO A ROLL GRINDER

BULLETIN BRG-3

Abrasive belt roll grinding and polishing principle and machine requirements do not differ widely from established grinding wheel procedures. Mainly, the difference lies in the ability of a belt to cut faster and consequently, to be used at higher traverse speeds. The accuracy factor is in the machine itself. Thus, a lathe that is capable of producing tolerances to .001" with a tool bit set-up, can be expected to preform equally well with an abrasive attachment—the G&P Belt Grinder designed for lathe mounting.

On large lathes, the G&P Belt Grinder can be mounted on the compound. On smaller lathes, the compound must be removed, and the grinder is mounted to the cross slide. Even on larger lathes, when the lathe is to be used permanently for roll grinding, the recommended procedure is to remove the lathe compound and fasten the grinder to the cross slide. This provides greater rigidity and maintains use of the cross-slide feed mechanism.

When supplied with the information requested under "mounting information" in bulletin BRG-3B, G&P can provide an adaptor to mount the grinder to your lathe.

Metal and Rubber Roll Grinding

To provide a satisfactory finish, all equipment must be in good condition. Loss of rigidity, or presence of wear anywhere in the system will produce a poor finish and cause a loss of accuracy.

A lubricant or coolant is recommended for grinding all types of metal rolls and is sometimes useful in obtaining a fine finish on rubber rolls in medium to hard range.

For 40 and softer durometer rubber, the application of powered soap stone or powdered zinc stearate at the point of contact is an excellent grinding aid. For chilled or cast-iron rolls, a water-soluble type coolant is suggested

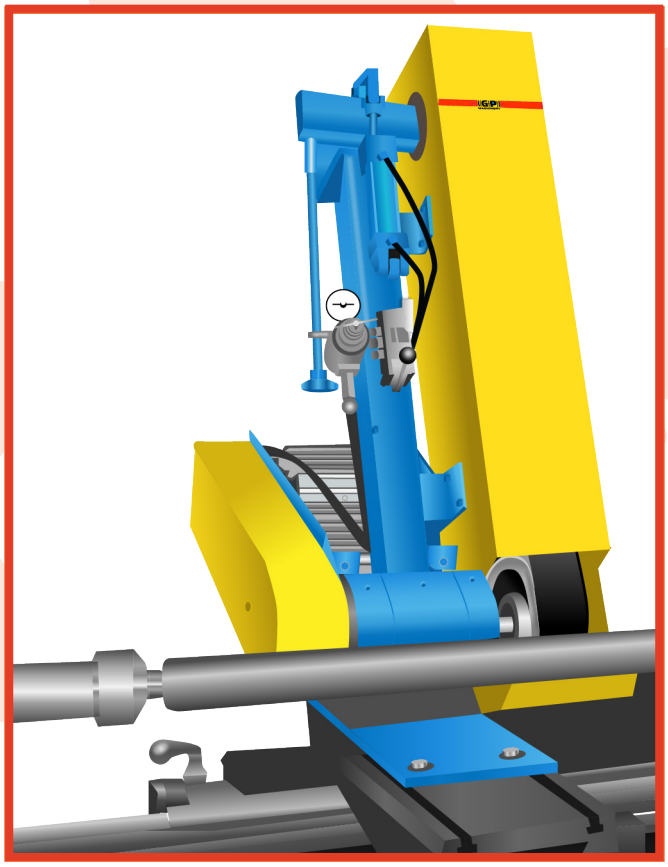

Lubricants and Coolants

For steel and stainless steel, a mixture of water and a good water-soluble oil of the heavy-duty type containing extreme pressure additives will give substantially better belt life, rate of cut and finish.

Coolants which circulate through settling tanks should have an adequate filtering system to remove foreign particles. Good efficient filters are necessary in any stage of roll grinding, but they are vital for high finishes

G&P MACHINERY

GRINDING & POLISHING MACHINERY CORPORATION
2801 TOBEY DRIVE / INDIANAPOLIS, IN 46219
PHONE (317) 898-0750 • FAX (317) 899-1627

THE G&P APPROACH TO ROLL GRINDING

BULLETIN BRG-3

The drawing to the right shows two methods of bringing the abrasive belt into contact with the work roll. For most roughing and finishing, the method shown in figure A is recommended. If slack of belt polishing is required, a removable front guard is recommended. If slack of belt polishing is required, a removable front guard section is provided that will allow the grinder to be tilted forward as shown in Figure B.

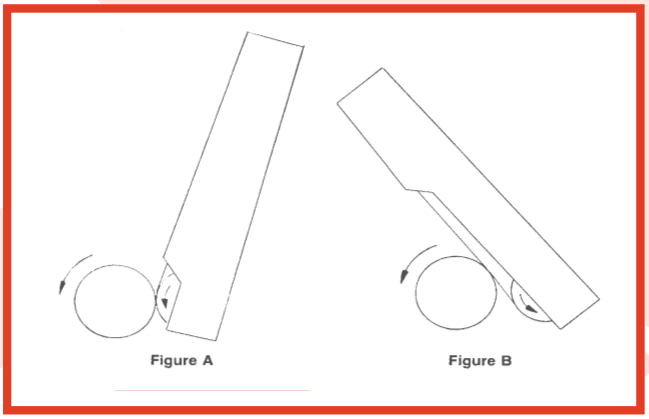

Contact Wheel Selection. Fig 1

Modifications... To Meet Your Requirements
If you need some changes from Standard models... such as something smaller... or larger...let us know. We will provide a quotation on a model to fit your needs. Figure 1 shows a 2-horse power model using 1" x 54' belt. Figure 2 shows a grinder equipped with a Tungsten carbide grinding wheel, for grinding rubber, plastic or synthetic materials.

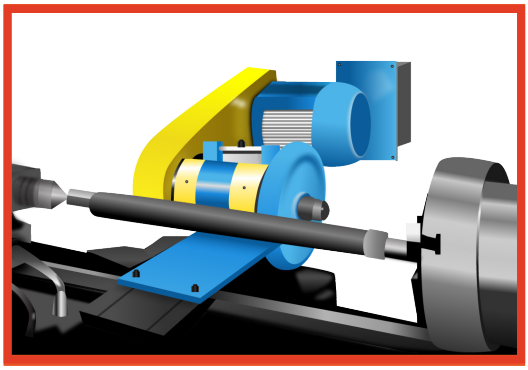

The grinding wheel guard has been removed in this picture for clarity. Fig 2

G&P MACHINERY

GRINDING & POLISHING MACHINERY CORPORATION
2801 TOBEY DRIVE / INDIANAPOLIS, IN 46219
PHONE (317) 898-0750 • FAX (317) 899-1627

THE G&P APPROACH TO ROLL GRINDING

BULLETIN BRG-3

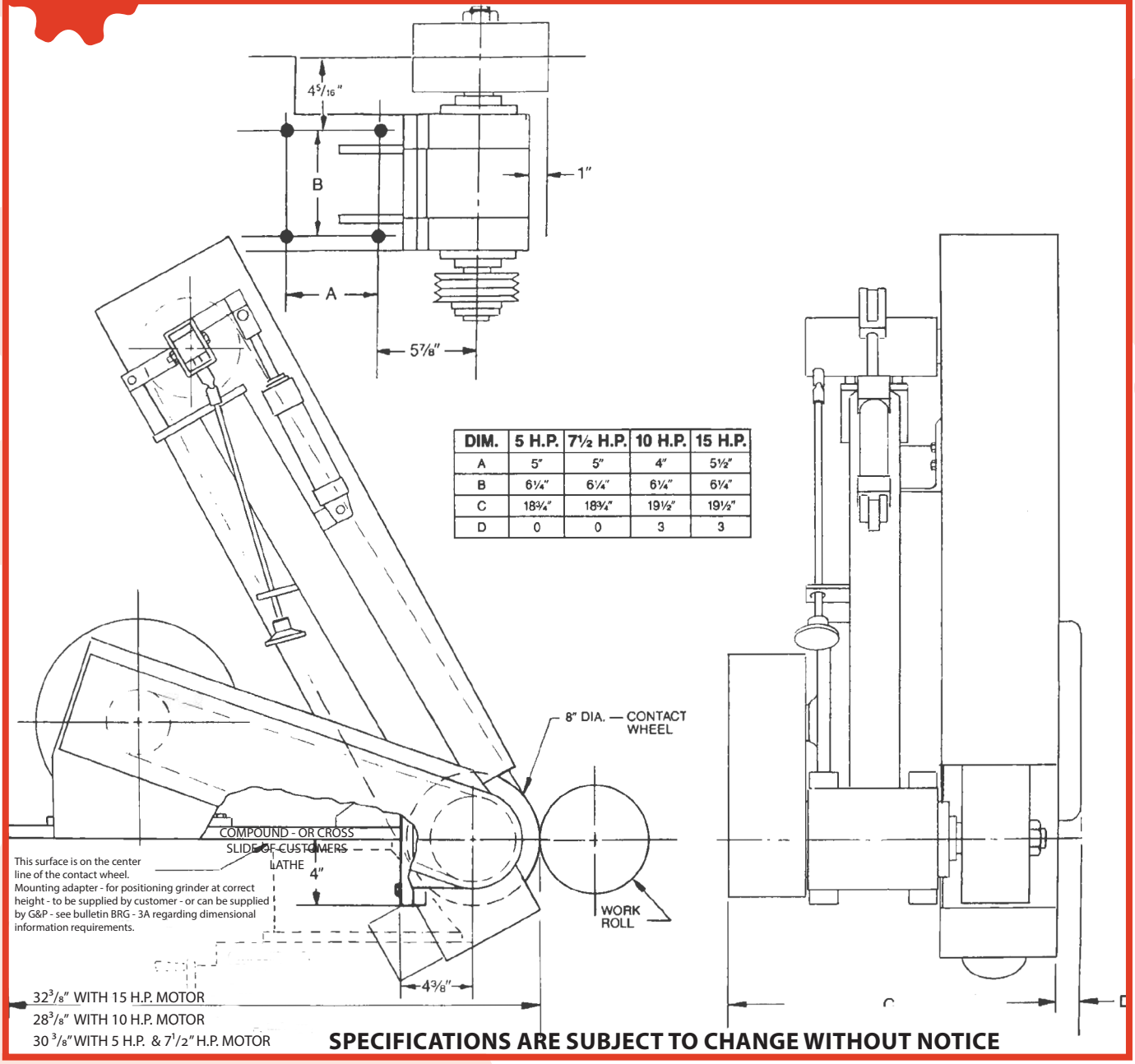

DIM.	5 H.P.	7½ H.P.	10 H.P.	15 H.P.
A	5"	5"	4"	5½"
B	6¼"	6¼"	6¼"	6¼"
C	18¾"	18¾"	19½"	19½"
D	0	0	3	3

SPECIFICATIONS ARE SUBJECT TO CHANGE WITHOUT NOTICE

When mounting this grinder on a lathe, the center line of the contact wheel must be the same height as the center line of the roll. On most lathes this requires the use of an adapter to bridge the space between the bottom surface of the grinder and the top surface of the compound or slide on which the grinder will be mounted.

This drawing may be helpful if you plan to make the adapter -or G&P can supply it if we have the mounting information from bulletin BRG-3B

G&P MACHINERY

GRINDING & POLISHING MACHINERY CORPORATION

2801 TOBEY DRIVE / INDIANAPOLIS, IN 46219

PHONE (317) 898-0750 • FAX (317) 899-1627

CONTACT WHEELS FOR ROLL GRINDING

BULLETIN BRG-3

The proper contact wheel is an important factor in any grinding application. For assistance in determining which wheel is best suited for your application, we offer the following illustrations with description. If you are in doubt about your selection, we will be glad to make a recommendation if you supply information regarding the type of material being ground, amount of stock to be removed, finish requirements, etc.

TYPE "SAR"

Serrated Aluminum Wheel with Rubber fill. Roughing wheel only for aggressive grinding applications. This wheel is directional and can only be run in one direction.

TYPE "PAR"

Plain Aluminum Wheel with Rubber fill. This has been found to be best for producing very close tolerances. It should be noted that the lathe must be in excellent condition. Otherwise, use Type PDDR.

TYPE "SDDR"

Serrated Dual Density Rubber. This wheel will produce tolerances nearly equal to type "PAR" but a better finish is achieved. This wheel is directional and can only be run in one direction.

TYPE "PDDR"

Plain Dual Density Rubber. This wheel is used where a good finish is needed with moderate stock removal and close tolerance. This is the most commonly used wheel.

TYPE "PR"

Plain Rubber. A smooth face wheel, 70 to 90 durometer (specify) for applications requiring the use of diamond or structured abrasive belts. This wheel can also be serrated (TYPE "SR") for general purpose grinding.

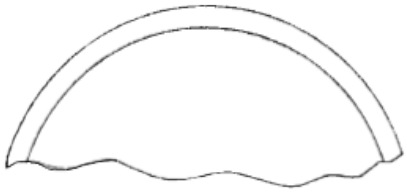

TYPE "PA"

Plain Aluminum Face. For grinding soft rubber rolls.

DRESSING THE CONTACT WHEEL

IT IS IMPORTANT that all wheels be "dressed" to the roll before grinding. This assures squareness of the contact wheel to the roll. Each time the grinder is removed, it is best to re-dress the wheel.

TO DRESS, place the grinder on the lathe and look for the best area of the roll. Be sure the grinder is as square as possible. Clean the roll so pressure sensitive abrasive can be placed on the roll. This should go at least 3/4 way around the roll and be 50 to 80 grit. Start the grinder and move the contact wheel in unit it makes contact with the abrasive. Move the grinder back-and-forth completely across the abrasive both ways. This must be repeated until the entire surface of the contact wheel has been dressed. Don't plunge cut.

Wear eye protection - Keep hands clear when using grinding equipment.

RECOVERING USED WHEELS

Type "SAR" AND "PAR" wheels have aluminum lands which, when worn down, can't be replaced. They can be made into Type SDDR, PDDR, and PR wheels at some savings. The SDDR, PDDR and PR type wheels can be recovered at considerable savings. It is strongly recommended that a spare contact wheel be ordered with the grinder. Delivery on replacement wheels may require 6 to 8 weeks.

G&P MACHINERY

GRINDING & POLISHING MACHINERY CORPORATION

2801 TOBEY DRIVE / INDIANAPOLIS, IN 46219

PHONE (317) 898-0750 • FAX (317) 899-1627

THE G&P APPROACH TO ROLL GRINDING

BULLETIN BRG-3

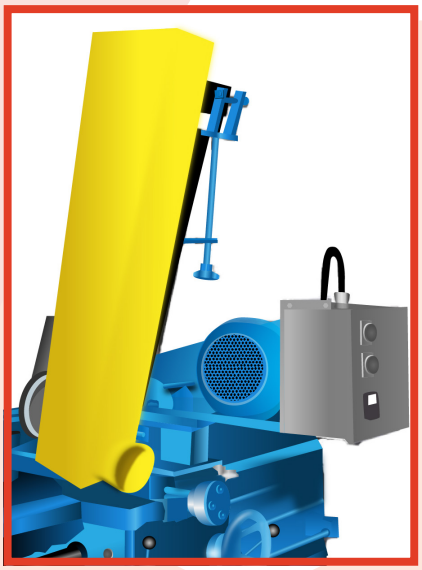

Mounting Information

A schematic on the lower portion of this page illustrates two common types of lath compound tool holders and the cross slide of a lathe. The size of the lathe on which the grinder is to be used frequently determines whether it is best to mount on the compound slide of the cross slide.

On the large lathes, mounting on the compound slide may prove satisfactory, but on smaller lathes, it is better to remove the compound and mount directly on the cross slide.

The schematic shows which dimensions are needed. In order to provide an adaptor that will fit the lathe.

NOTE: Size of tailstock housing determines minimum diameter of roll grinding.

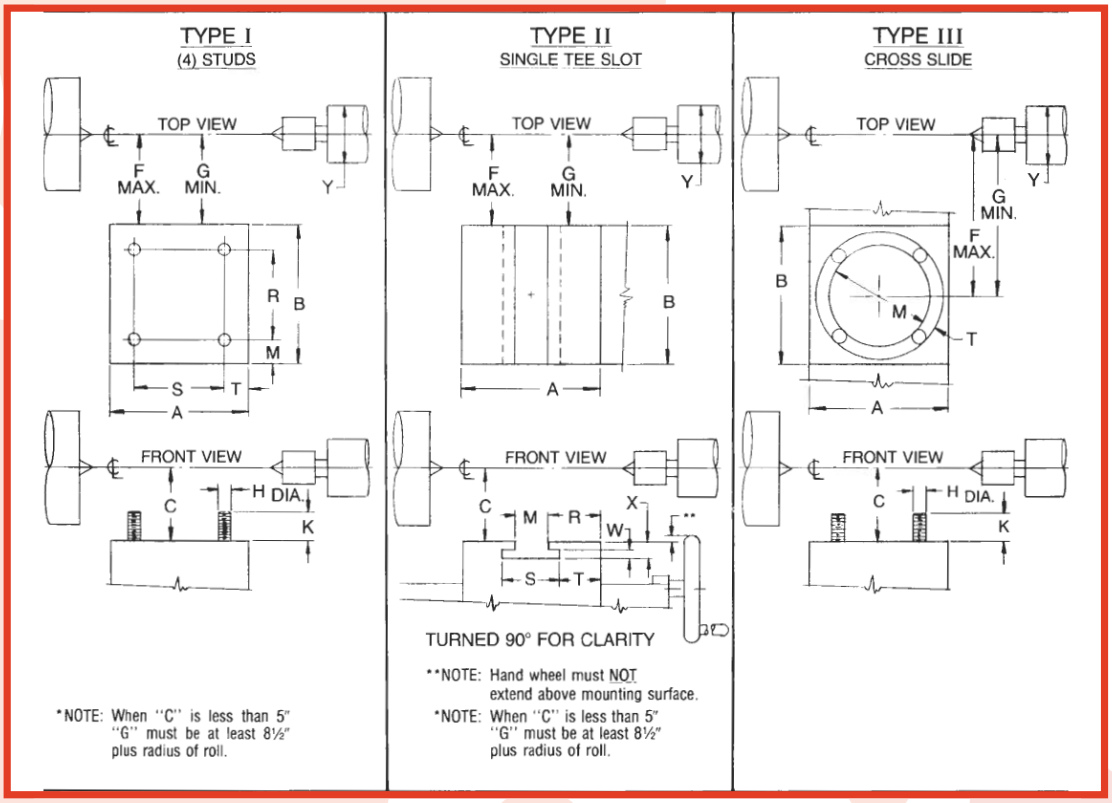

FOR THE BEST PLACEMENT OF THE GRINDER - PLEASE SPECIFY THE MINIMUM AND MAXIMUM SIZE OF ROLL

G&P MACHINERY

GRINDING & POLISHING MACHINERY CORPORATION
2801 TOBEY DRIVE / INDIANAPOLIS, IN 46219
PHONE (317) 898-0750 • FAX (317) 899-1627